American Standard

Concept Sphere

Counter Top
TF-0452

FEATURES

- Easy to clean
- Overflow hole on back position

SPECIFICATIONS

- Faucet Drillings: Single / T4" / T8"
- Basin Dimensions: W455*L550*H200 mm.
- Material: Vitreous China

COLOR AVAILABILITY

- White (WT)

INCLUDED COMPONENTS

- Overflow ring
- Installation manual

DIMENSIONAL DRAWING

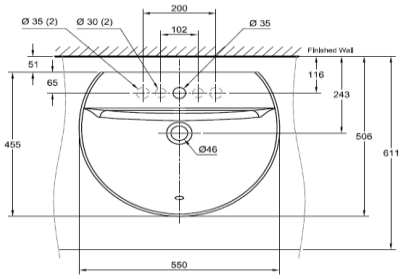

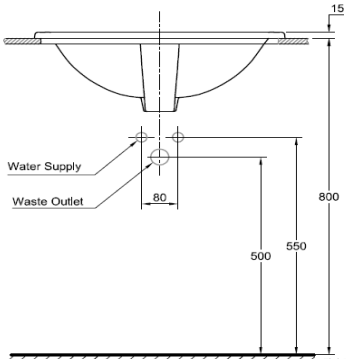

SHIPPING WEIGHT

- Net Weight: 10 KGs.
- Gross Weight: 12.1 KGs

STANDARDS CRITERIA

- TIS Standard
- EN Standard
- ASME Standard

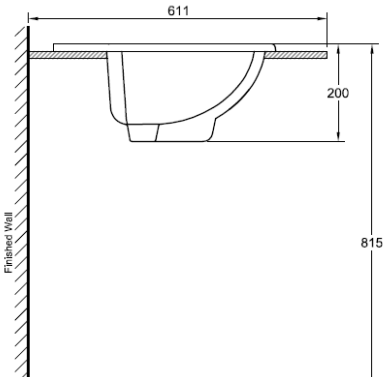

This document is the property of American Standard. It can neither be reproduced, nor communicated, without authorization.
American Standard reserves the right to change dimensions and specifications without notice, we assume no liability for the use of obsolete dimensions