Acacia Evolution

Deck-Mount Bath&Shower Mixer Faucet
WF-1300.6T1.50
WF-1300.601.50

FEATURES

- Modern design that can fit with any style of bathroom
- Ceramic disc valve for a life time use
- Strong brass construction
- Nickel and chromium plating for durable finish
- With 5-function Hand Shower
  1) Spray; 2) Massage; 3) Champagne;
  4) Spray+Massage; 5) Spray+Champagne;
- Flow Rate @ 0.1 MPa (With Spout) : 9.72 L/Min
- Flow Rate @ 0.1 MPa (With Shower) : 5.76 L/Min
- Without Brass Pull-up Pop-up

SPECIFICATIONS

- Deck-Mount Bath&Shower Mixer Faucet
- 4-Hole Installation: dual handles (Hot & Cold)
- Spout Reach : 191 mm
- Spout Height : 86 mm

FINISHES AVAILABILITY

- Chrome (- CP)

AWARDS WON

- N/A

SHIPPING WEIGHT

- Product weight: 4.80 kg

STANDARDS CRITERIA

- TIS 2066-2552
- GB 18145-2014

DIMENSIONAL DRAWING

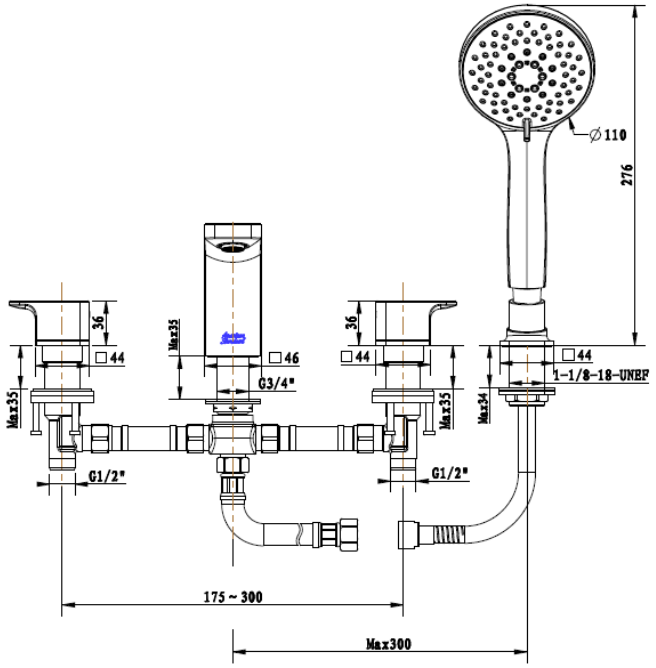

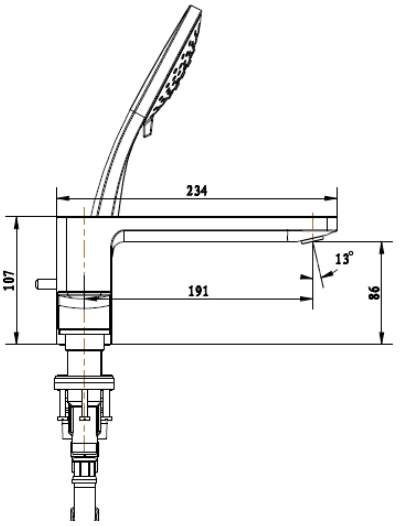

This document is the property of American Standard. It can neither be reproduced, nor communicated, without authorization.
American Standard reserves the right to change dimensions and specifications without notice, we assume no liability for the use of obsolete dimensions.